Core Maths

Assumed Knowledge Practice Questions

Number

Ordering Numbers

Put these numbers in order, starting with the smallest:

1) 74, 57, 38, 8, 61

2) 39, 84, 11, 128, 24

3) 76, 102, 12, 140, 73

4) 3.1, 31, 1.3, 13, 1.03

5) 0.321, 0.312, 1.04, 1.23

6) 0.34, 0.047, 0.4, 0.43, 0.403

7) 0.79, 0.709, 0.97, 0.792

8) 2.71, 2.074, 2.071, 2.701

9) 0.875, 0.88, 0.0885, 0.008, 0.11

10) 3, –2, –7, 10, –1

11) –3, –11, 1, –5, 7

12) –4, 6, 0, –6, –1

Rounding to the Nearest 10, 100, 1000

1) Round these numbers to the nearest 10:

a) 26

b) 62

c) 75

d) 231

e) 797

f) 5 842

g) 9 875

h) 13 758

2) Round these numbers to the nearest 100:

a) 78

b) 223

c) 549

d) 1 450

e) 1 382

f) 4 537

g) 9 193

h) 17 625

3) Round these numbers to the nearest 1000:

a) 850

b) 1 455

c) 3 230

d) 7 500

e) 8 455

f) 9 690

g) 12 390

h) 28 910

Multiply and Divide by Powers of 10

1) Multiply the following numbers by 10, 100 and 1000:

		×10	×100	×1000
e.g.	*21*	*210*	*2100*	*21000*
	9			
	63			
	845			
	3.65			
	0.4			
	1.324			

2) Divide the following numbers by 10, 100 and 1000:

		÷10	÷100	÷1000
e.g.	*21*	*2.1*	*0.21*	*0.021*
	9			
	63			
	845			
	3.65			
	0.4			
	1.324			

3) Work out the following:

$3 \times 100 =$

$65 \times 10 =$

$17 \div 10 =$

$359 \times 10 =$

$0.5 \div 100 =$

$2.3 \times 1000 =$

$42 \div 100 =$

$3582 \div 100 =$

$0.9 \times 10 =$

$3.645 \times 100 =$

$88 \div 1000 =$

$39.62 \times 1000 =$

Fractions, Decimals and Percentages

1. Write the following fractions as decimals and percentages:

eg. $\frac{1}{10} \xrightarrow{1 \div 10} 0{\cdot}1 \xrightarrow{0.1 \times 100} 10\%$

a) $\frac{3}{10}$ =

b) $\frac{1}{5}$ =

c) $\frac{2}{5}$ =

d) $\frac{1}{4}$ =

e) $\frac{3}{4}$ =

f) $\frac{1}{2}$ =

g) $\frac{1}{3}$ =

2. Fill in the blanks in the table below:

Fraction	Decimal	Percentage
$\frac{6}{10}$		
	0.2	
	0.9	
		40%
		25%
	$0.\dot{3}$	
		70%

Ordering Fractions, Percentages & Decimals

1. Change these fractions to decimals

eg. $\frac{1}{5} \xrightarrow{1 \div 5} 0.2$

a) $\frac{3}{5}$ b) $\frac{4}{5}$ c) $\frac{1}{4}$ d) $\frac{3}{4}$ e) $\frac{1}{3}$ f) $\frac{2}{3}$

2. Change these percentages to decimals

eg. $52\% \xrightarrow{52 \div 100} 0.52$

a) 63% b) 8% c) 59% d) 81% e) 28.5% f) 6.5%

3. Write the following numbers in order of size (smallest to largest)

a) 0.61 $\frac{2}{3}$ 59% 0.55 $\frac{3}{5}$

b) 81% 0.78 $\frac{4}{5}$ $\frac{3}{4}$ 0.805

c) $\frac{1}{3}$ 0.3 $\frac{1}{4}$ 28.5% 0.32

d) 0.23 21% $\frac{1}{5}$ $\frac{22}{100}$ 19.2%

e) 1% 0.012 $\frac{3}{100}$ 0.021 $\frac{1}{40}$

Estimation

1) Work out an estimate
eg. $17 \times 193 \longrightarrow 20 \times 200 = 4000$

a) 12×304

b) 38×72

c) 231×56

d) 773×13

2) Work out an estimate
eg. $4.7 \times 54 \longrightarrow 5 \times 50 = 250$

a) 3.8×52

b) 7.9×103

c) 9.6×265

d) 512×2.4

3) Work out an estimate
eg. $37 \div 12 \longrightarrow 40 \div 10 = 4$

a) $122 \div 53$

b) $372 \div 44$

c) $\frac{341}{28}$

d) $\frac{109}{96}$

4) Work out an estimate
eg. $37 \div 1.2 \longrightarrow 40 \div 1 = 40$

a) $68 \div 1.7$

b) $37 \div 7.9$

c) $\frac{253}{4.6}$

d) $\frac{96}{10.4}$

5) Work out an estimate

eg. $\frac{62 \times 28}{89} \longrightarrow \frac{60 \times 30}{90} = \frac{1800}{90}$

a) $\frac{45 \times 21}{14}$

b) $\frac{76 \times 17}{42}$

c) $\frac{42 \times 53}{2.2}$

d) $\frac{33 \times 61}{8.7}$

Place Value When Multiplying

1) Use the information that $23 \times 68 = 1564$
work out the value of:

a) 2.3×68

b) 2.3×6.8

c) 0.23×68

d) 2.3×0.68

e) 230×68

f) 230×6.8

g) 2300×680

h) $1564 \div 23$

i) $1564 \div 2.3$

j) $15640 \div 23$

2) Using the information that $416 \times 35 = 14560$
work out the value of:

a) 4.16×35

b) 41.6×0.35

c) 41600×350

d) 0.416×350

e) 4160×0.035

f) 41.6×350000

g) 0.00416×0.0035

h) $14560 \div 3.5$

i) $145.6 \div 4.16$

j) $1.456 \div 0.35$

3) If $78 \div 2.5 = 31.2$, what do you have to divide 78 by to get an answer of 0.312?

4) If $812 \times 2.9 = 2354.8$, what do you have to multiply 8.12 by to get an answer of 23548?

Long Multiplication

1) Work out

a) 13×18

b) 135×27

c) 116×41

d) 264×43

e) 326×24

f) 281×59

g) 286×48

h) 428×34

i) 461×45

2) "MathsWatch Travel" has 36 coaches.
Each of these coaches can carry 53 passengers.
How many passengers in total can all the coaches carry?

3) "MathsWatch Tours" has a plane that will carry 47 passengers.
To fly from Manchester to Lyon, each passengers pays £65
Work out the total amount that the passengers pay.

4) A litre of petrol costs 86p.
Work out the cost of 35 litres of petrol.
Give your answer in pounds (£).

5) Last week, MathsWatch posted 439 parcels.
Each parcel needed a 97p stamp.
Work out the total cost of the stamps.
Give your answer in pounds (£).

6) A stationery supplier sells rulers for 23p each.
MathsWatch college buys 455 of these rulers.
Work out the total cost of these 455 rulers.
Give your answer in pounds (£).

7) A Maths book costs £1.99
Mr Smith buys a class set of 36 books.
Work out the total cost of the 36 books.

8) The cost of a calculator is £7.39
Work out the cost of 32 of these calculators.

9) Salvatore makes pizzas.
He receives an order for 34 pizzas.
Salvatore charges £2.55 for each pizza.
Work out the total amount he would charge for 34 pizzas.

10) A ream of tracing paper costs £3.23
Work out the cost of 45 reams of tracing paper.

Long Division

1) Work out

a) $325 \div 5$

b) $448 \div 8$

c) $221 \div 13$

d) $377 \div 29$

e) $27 \div 6$

f) $123 \div 15$

g) $75 \div 4$

h) $135 \div 20$

i) $381 \div 12$

2) A box can hold 19 books.
Work out how many boxes will be needed to hold 646 books.

3) The distance from Glasgow to Paris is 1290 km.
A flight from Glasgow to Paris lasts 3 hours.

Given that $\boxed{Average\ \ speed = \frac{Distance}{Time}}$

Work out the average speed of the aeroplane in km/h.

4) Pencils cost 25p each.
Mr Smith spends £15 on pencils.
Work out the number of pencils he gets.

5) Yesterday, Gino was paid £19.61 for delivering pizzas.
He is paid 53p for each pizza he delivers.
Work out how many pizzas Gino delivered yesterday.

6) Emma sold 38 teddy bears for a total of £513
She sold each teddy bear for the same price.
Work out the price at which Emma sold each teddy bear.

7) Canal boat for hire
£1855.00
for 14 days

Work out the cost per day of hiring the canal boat.

8) A teacher has £539 to spend on books.
Each book costs £26
How many books can the teacher buy?

9) John delivers large wooden crates with his van.
The weight of each crate is 68 kg.
The greatest weight the van can hold is 980 kg.
Work out the greatest number of crates that the van can hold.

10) Rulers costs 17p each.
MathsWatch High School has £120 to spend on rulers.
Work out the number of rulers bought.

Decimal Places and Significant Figures

1) Round the following numbers to 1 decimal place

a) 13.681 b) 344.7234 c) 0.76133

2) Round the following numbers to 2 decimal places

a) 45.7241 b) 0.6851 c) 4623.33621

3) Round the following numbers to 1 significant figure

a) 4252 b) 26112 c) 7523987

4) Round the following numbers to 1 significant figure

a) 963 b) 9562 c) 991236

5) Round the following numbers to 1 significant figure

a) 0.005621 b) 0.07756 c) 0.0000523647

6) Round the following numbers to 2 significant figures

a) 752305 b) 147006 c) 296124

7) Round the following numbers to 2 significant figures

a) 0.00036264 b) 0.00045921 c) 0.0003654871

8) Round the following numbers to 3 significant figures

a) 923146 b) 0.0048912 c) 299622

9) Use a calculator to work out the following sums.
Give all answers to 3 significant figures.

a) 236×149 b) $17.3 \div 0.14$ c) $67 \div 3892$

d) 779×9984 e) $47.5 \div 0.0037$ f) $215 \times 3.2 \div 0.0018$

Proportion

Non-Calculator

1) 8 bananas cost £1.60
Work out the cost of 5 bananas.

2) Emily bought 4 identical pairs of sock for £3.60
Work out the cost of 9 pairs of these socks.

3) The price of a box of chocolates is £7.20
There are 36 chocolates in the box.
Work out the cost of one chocolate.

4) Theresa bought 5 theatre tickets for £60
Work out the cost of 9 theatre tickets.

5) Jenny buys 4 folders.
The total cost of these 4 folders is £6.40
Work out the total cost of 7 of these folders.

Calculator

6) The cost of 15 litres of petrol is £12
Work out the cost of 20 litres of petrol.

7) 3 maths books cost £7.47
Work out the cost of 5 of these.

8) Five 1 litre tins of paint cost a total of £48.75
Work out the cost of seven of these 1 litre tins of paint.

9) William earns £9.30 for $1\frac{1}{2}$ hours of work.
Work out how much he would earn for:
a) 30 minutes
b) 5 hours

10) It took 1 hour for Emyr to lay 150 bricks.
He always works at the same speed.
How long will it take Emyr to lay 720 bricks?
Give your answer in hours and minutes.

Powers

1) Write the following using indices:
eg. $3 \times 3 \times 3 \times 3 = 3^4$

a) $2 \times 2 \times 2 \times 2$

b) $4 \times 4 \times 4$

c) $5 \times 5 \times 5 \times 5 \times 5 \times 5$

d) $12 \times 12 \times 12 \times 12 \times 12$

e) 3.6×3.6

f) $5.2 \times 5.2 \times 5.2$

2) Write each of the following as a single power:
eg. $5^2 \times 5^4 = 5^6$

a) $6^2 \times 6^3$

b) $7^4 \times 7^2$

c) $9^3 \times 9^6$

d) $5^3 \times 5$

e) $2^9 \times 2^3$

f) $7.2^3 \times 7.2^2$

3) Write each of the following as a single power:
eg. $7^5 \div 7^2 = 7^3$

a) $9^5 \div 9^3$

b) $6^9 \div 6^5$

c) $11^7 \div 11^2$

d) $\dfrac{7^8}{7^3}$

e) $\dfrac{3^6}{3}$

f) $\dfrac{8^{15}}{8^4}$

4) Write each of the following as a single power:

eg. $\dfrac{7^3 \times 7^8}{7^6} = \dfrac{7^{11}}{7^6} = 7^5$

a) $\dfrac{4^7 \times 4^3}{4^6}$

b) $\dfrac{9^2 \times 9^6}{9^4}$

5) Match together cards with the same answer

5^7	$5^{10} \div 5^6$	$5^6 \times 5^2$	5^3	5^2
5^8	5×5	$\dfrac{5^2 \times 5^4}{5^3}$	$5^2 \times 5^5$	5^4

Volume of Cuboids

1) Find the volume of this cuboid.

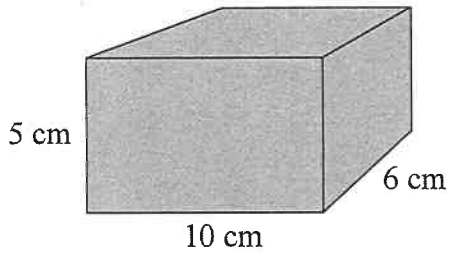

2) Find the volume of this cuboid.

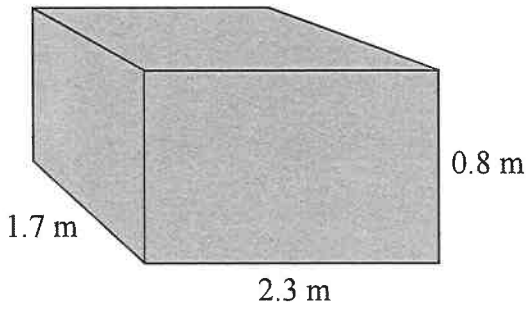

3) The volume of this cuboid is 480 cm^3.
Find the length of the side marked x.

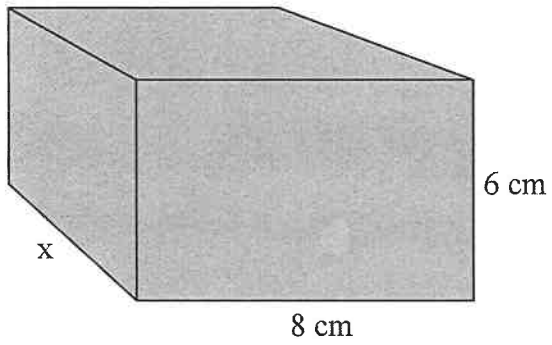

4) Boxes A and B are both cuboids.
How many of box B could be packed into box A?

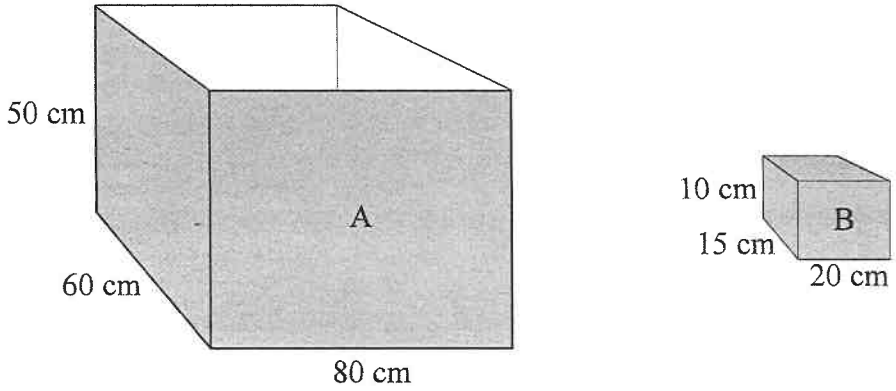

Converting Metric Measures

1) Complete this table by writing down a sensible unit for each measurement.
Four have been done for you.

	Metric	Imperial
The distance between London and Manchester		miles
The length of a pen	cm	
The weight of your Maths Teacher		pounds
The amount of petrol in a car		gallons
The length of an ant		

2) Change the following measurements:

a) 4 cm to mm
b) 7 m to cm
c) 5 m to mm
d) 10 cm to mm
e) 25 m to mm
f) 34 m to cm
g) 1 km to m
h) 1 km to cm
i) 23 km to m

3) Change the following measurements:

a) 300 cm to m
b) 4 mm to cm
c) 7425 mm to m
d) 6 cm to m
e) 412 cm to m
f) 1500 m to km
g) 4386 cm to m
h) 549 mm to cm
i) 0.3 km to m

4) Change the following measurements:

a) 5 m^2 to cm^2
b) 8 cm^2 to mm^2
c) 250 cm^2 to m^2
d) 8.2 m^2 to cm^2
e) 7320 mm^2 to cm^2
f) 8 m^3 to cm^3
g) 5.1 m^3 to cm^3
h) 53478 mm^3 to cm^3
i) 183000 cm^3 to m^3

Factors, Multiples and Primes

1) Write the factors of

a) 6 b) 16 c) 18 d) 30

2) In a pupil's book the factors of 12 are listed as

1 2 3 4 5 12

The above list contains a mistake.

Cross it out from the list and replace it with the correct number.

3) The factors of 30 and 40 are listed

30: 1, 2, 3, 5, 6, 10, 15, 30
40: 1, 2, 4, 5, 8, 10, 20, 40

Write the common factors of 30 and 40 (the numbers that are factors of 30 and 40).

4) Write the first four multiples of

a) 3 b) 5 c) 10 d) 15

5) In a pupil's book the first 7 multiples of 8 are listed as

8 16 22 32 40 48 54

The above list contains 2 mistakes.
Cross them out and replace them with the correct numbers.

6) The first five multiples of 4 and 10 are listed

4: 4, 8, 12, 16, 20
10: 10, 20, 30, 40, 50

From the two lists above, write the common multiple of 4 and 10.

7) List the first five prime numbers

8) Using just this list of numbers:

11 18 1 4 21 24 9 3 12 2 19

find the following:

a) The prime numbers

b) The factors of 18

c) The multiples of 3

Evaluate Powers, Squares, Cubes & Roots

1. Evaluate

a) 7^2 b) 2^4 c) 5^2 d) 3^3 e) 1^6

2. Work out the square of

a) 1 b) 2 c) 4 d) 6 e) 11

3. Work out

a) 3^2 b) 9^2 c) 10^2 d) 12^2 e) 100^2

4. Work out the cube of

a) 1 b) 3 c) 5 d) 6 e) 100

5. Work out

a) 2^3 b) 4^3 c) 10^3

6. Work out the square root of

a) 1 b) 9 c) 81

7. Work out

a) $\sqrt{25}$ b) $\sqrt{49}$ c) $\sqrt{121}$

8. Work out the cube root of

a) 27 b) 1 c) 125

9. From the following numbers

4 27 8 64 16 19 100 360 45 3

Find

a) The square numbers

b) The cube numbers

c) The square root of 64

d) The cube root of 27

10. Match together cards with the same answer

9^2	$\sqrt{9}$	81	5^3
2^5	125	32	3

© Mathswatch	Clip 51

Find a Percentage with a Calculator

1) Work out

a) 21% of 340

b) 9% of 2700

c) 17.5% of 420

d) 3.5% of 78.6

e) 80.5% of 3200

f) 117.5% of 35

2) Work out the total cost (including VAT) of the following items.

Trainers £45.50 plus 17.5% VAT	Tennis racquet £28.99 plus 17.5% VAT	Football boots £57 plus 17.5% VAT

3) 850 people attended a festival.
16% of the people were children.
Work out the number of children at the festival.

© Mathswatch	Clip 52

Find a Percentage Without a Calculator

1) Work out (i) 10% and (ii) 5% and (iii) 15% of:

a) 200 b) 30 c) 450 d) 54

2) Work out

a) 30% of 280

b) 80% of 3500

c) 15% of 540

d) 17.5% of 300

e) 55% of 700

f) 17.5% of 180

3) Work out the total cost (including VAT) of the following items.

Video recorder £200 + 17.5% VAT	Tape player £60 + 17.5% VAT	Laptop £1200 + 17.5% VAT

4) There are 1300 students at MathsWatch College.
45% of these students are boys.
Work out the number of boys.

© Mathswatch	Clip 53

Change to a Percentage With a Calculator

1) In a class of 37 pupils, 22 are boys.

a) What percentage of the class are boys?

b) What percentage of the class are girls?

2) Sarah sat a mock examination and gained the following marks:

Subject	Mark
English	$\frac{82}{94}$
Maths	$\frac{79}{123}$
Science	$\frac{38}{46}$

a) Write each of Sarah's marks as a percentage.

b) Which is Sarah's best subject in terms of percentage score?

3) A brand new car costs £16 500.
A discount of £2 227.50 is negotiated with the dealer.
What is the percentage discount?

MathsWatch	Clip 54

Change to a Percentage Without a Calculator

1) Write the following as percentages:

a) 13 out of 50

b) 6 out of 20

c) 17 out of 25

d) 34 out of 40

e) 12 out of 80

f) 27 out of 60

2) In a football tournament, Team A won 16 of the 20 games they played, whilst team B won 19 of their 25 games.
What percentage of their games did they each win?

3) 60 participants were invited to a conference.
36 of the participants were females.

a) Work out the percentage of female participants.

b) What is the percentage of male participants?

4) A company has 800 employees.
440 of these 800 employees are males.
176 of these 800 employees are under 25 years old.

a) What percentages of males are employed in this company?

b) What percentage of employees are under 25?

Find a Fraction of an Amount

1. Work out these amounts.

a) $\frac{3}{4}$ of £20 b) $\frac{2}{3}$ of 60 kg c) $\frac{3}{8} \times 24$

d) $150 \times \frac{2}{3}$ e) $\frac{2}{9}$ of 180 cm f) $49 \times \frac{4}{7}$

g) $60 \times \frac{1}{4}$ h) $\frac{5}{8}$ of £48 i) $4000 \times \frac{7}{8}$

2. There are 600 apples on a tree and there are maggots in $\frac{3}{5}$ of them.

How many apples have maggots in them?

3. Liz and Lee are travelling in a car from Glasgow to Poole (770 km).

At midday they had already travelled $\frac{5}{7}$ of the total distance.

What distance, in km, had they travelled by midday?

4. A digital camera that cost £49 was sold on eBay for $\frac{3}{7}$ of the original price.

What was the selling price?

5. Yesterday Thomas travelled a total of 175 miles.

He travelled $\frac{2}{5}$ of this distance in the morning.

How many miles did he travel during the rest of the day?

6. Debra received her £15 pocket money on Saturday.

She spent $\frac{1}{3}$ of her pocket money on magazines.

She spent $\frac{2}{5}$ of her pocket money on a necklace.

How much of the £15 did she have left?

Addition and Subtraction of Fractions

1. Work out the following giving your answer as a fraction in its simplest form

a) $\frac{3}{5}+\frac{1}{5}$ b) $\frac{3}{7}+\frac{2}{7}$ c) $\frac{5}{8}-\frac{3}{8}$ d) $\frac{7}{13}-\frac{4}{13}$

2. Work out the following giving your answer as a fraction in its simplest form

a) $\frac{3}{5}+\frac{2}{10}$ b) $\frac{1}{3}+\frac{2}{9}$ c) $\frac{13}{20}-\frac{3}{5}$ d) $\frac{9}{12}-\frac{1}{3}$

3. Change the following to mixed numbers

a) $\frac{8}{5}$ b) $\frac{14}{3}$ c) $\frac{35}{6}$ d) $\frac{17}{5}$

4. Change the following to top heavy (or improper) fractions

a) $1\frac{2}{5}$ b) $3\frac{1}{4}$ c) $6\frac{1}{5}$ d) $2\frac{5}{9}$

5. Work out the following giving your answer as a fraction in its simplest form

a) $1\frac{2}{5}+6\frac{1}{5}$ b) $2\frac{3}{4}+1\frac{1}{5}$ c) $4\frac{1}{6}-3\frac{1}{3}$ d) $7\frac{4}{9}-2\frac{5}{9}$

6. Work out the following giving your answer as a fraction in its simplest form

a) $\frac{3}{4}-\frac{1}{5}$ b) $\frac{5}{11}+\frac{3}{11}$ c) $5\frac{1}{2}-\frac{2}{3}$ d) $\frac{7}{12}+\frac{3}{4}$

e) $2\frac{4}{5}+9\frac{2}{5}$ f) $\frac{2}{7}+\frac{1}{2}$ g) $9\frac{1}{4}-5\frac{2}{5}$ h) $\frac{12}{15}-\frac{7}{15}$

7. Ted received his pocket money on Friday.

He spent $\frac{3}{5}$ of his pocket money on games.

He spent $\frac{1}{10}$ of his pocket money on magazines.

What fraction of his pocket money did he have left?

8. Maisie buys a bag of flour.

She uses $\frac{1}{4}$ to bake a cake and $\frac{2}{5}$ to make a loaf.

a) What fraction of the bag of flour was used?
b) What fraction of the bag of flour is left?

9. Work out the total length of this shape.
Give your answer as a mixed number.

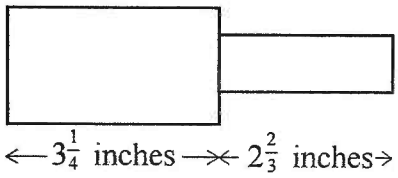

Diagram **NOT** accurately drawn

Multiplication and Division of Fractions

Work out the following giving your answer as a fraction in its simplest form.

1) $\frac{4}{5} \times \frac{1}{3}$

2) $\frac{3}{4} \times \frac{2}{3}$

3) $\frac{3}{10} \times \frac{4}{9}$

4) $\frac{3}{7} \times \frac{5}{6}$

5) $\frac{6}{25} \times \frac{15}{18}$

6) $\frac{4}{15} \times \frac{3}{16}$

7) $2\frac{2}{5} \times 3\frac{3}{4}$

8) $1\frac{2}{3} \times 3\frac{3}{10}$

9) $4\frac{2}{3} \times \frac{5}{7}$

10) $\frac{3}{5} \times 12\frac{1}{2}$

11) $\frac{1}{3} \div \frac{5}{6}$

12) $\frac{2}{7} \div \frac{10}{21}$

13) $\frac{4}{5} \div 8$

14) $\frac{4}{11} \div \frac{4}{11}$

15) $\frac{4}{5} \div \frac{8}{9}$

16) $\frac{5}{8} \div \frac{10}{19}$

17) $1\frac{2}{3} \div 2\frac{1}{2}$

18) $3\frac{1}{5} \div 2\frac{2}{3}$

19) $25 \div 2\frac{1}{7}$

20) $\frac{2}{3} \div 2\frac{2}{9}$

Change a Fraction to a Decimal

Write the following fractions as decimals

1) $\frac{3}{10}$

2) $\frac{7}{10}$

3) $\frac{9}{100}$

4) $\frac{1}{2}$

5) $\frac{3}{4}$

6) $\frac{2}{5}$

7) $\frac{7}{20}$

8) $\frac{1}{3}$

9) $\frac{1}{8}$

10) $\frac{5}{8}$

BODMAS

Work out

1) $6 \times 5 + 2$

2) $2 + 6 \times 5$

3) $35 - 4 \times 3$

4) $48 \div (14 - 2)$

5) $27 \div (3 + 6)$

6) $27 \div 3 + 6$

7) $(9 + 2) \times 2 + 5$

8) $4 \times (1 + 4) - 6$

9) $6 \times 4 - 3 \times 5$

10) $\dfrac{9+3}{4+2}$

11) $\dfrac{23+9}{7-3}$

12) $\dfrac{7-2^2}{4^2-15}$

13) $\dfrac{5^2+3}{2\times 7}$

14) $\dfrac{5\times 6-4}{13}$

15) $\dfrac{8\times 2-4}{3+1^2}$

16) $\dfrac{12-3\times 2}{14\div 7}$

17) $\dfrac{20-3^2}{10-(5+4)}$

18) $\dfrac{3+9\times 8}{1+6\times 4}$

Ratio

1. Write the following ratios in their simplest form

   a) 6 : 9 b) 10 : 5 c) 7 : 21 d) 4 : 24

   e) 12 : 40 f) 18 : 27 g) 4 : 2 : 8 h) 18 : 63 : 9

2. Complete the missing value in these equivalent ratios

   a) 3 : 5 = 12 : ☐ b) 4 : 9 = ☐ : 27 c) ☐ : 7 = 16 : 14 d) 2 : 3 = 3 : ☐

3. Match together cards with equivalent ratios:

3 : 4	10 : 5	50 : 100	2 : 1
5 : 2	15 : 20	15 : 6	1 : 2

4. The ratio of girls to boys in a class is 4 : 5.

   a) What fraction of the class are girls?

   b) What fraction of the class are boys?

5. A model of a plane is made using a scale of 1 : 5.

   a) If the real length of the plane is 20m, what is the length of the model in metres?

   b) If the wings of the model are 100cm long, what is the real length of the wings in metres?

6. Share out £250 in the following ratios:

   a) 1 : 4 b) 2 : 3 c) 7 : 3 d) 9 : 12 : 4

7. Share out £80 between Tom and Jerry in the ratio 3 : 2.

8. A box of chocolates has 3 milk chocolates for every 2 white chocolates.
   There are 60 chocolates in the box.
   Work out how many white chocolates are in the box.

9. In a bracelet, the ratio of silver beads to gold beads is 5 : 2.
   The bracelet has 25 silver beads.
   How many gold beads are in the bracelet?

10. To make mortar you mix 1 shovel of cement with 5 shovels of sand.
    How much sand do you need to make 30 shovels of mortar?

Recipe Type Ratio Questions

1) Here are the ingredients for making a vegetable soup for 6 people:

2 carrots
1 onion
800ml stock
50g lentils
4g thyme

Work out the amount of each ingredient for

a) 12 people

b) 9 people

c) 30 people.

2) Here are the ingredients for making apple crumble for 4 people:

80g plain flour
60g ground almonds
90g sugar
60g butter
4 apples

Work out the amount of each ingredient for

a) 2 people

b) 6 people

c) 18 people.

3) Here are the ingredients for making 1500 ml of parsnip soup:

450g parsnips
300g leeks
150g bramley apples
3 onions
$1\frac{1}{2}$ pints of chicken stock

Work out the amount of each ingredient for

a) 500 ml of soup

b) 1000 ml of soup

c) 2500 ml of soup.

Overview of Percentages

With a calculator

1) Find the following to the nearest penny:

a) 23% of £670
b) 12% of £580
c) 48% of £64
d) 13% of £7.50
e) 87% of £44
f) 15.7% of £7000
g) 23.8% of £980
h) 34% of £16.34
i) 48.6% of £971.26
j) 78.24% of £12.82
k) 42.15% of £7876.42
l) 0.57% of £60000

Without a calculator

2) Find the following:

a) 10% of £700
b) 10% of £400
c) 10% of £350
d) 10% of £530
e) 10% of £68
f) 10% of £46
g) 10% of £6.50
h) 10% of £12.20
i) 20% of £600
j) 30% of £900
k) 60% of £800
l) 20% of £650
m) 40% of £320
n) 15% of £300
o) 15% of £360
p) 65% of £12000
q) 45% of £64
r) 85% of £96
s) 17.5% of £800
t) 17.5% of £40
u) 17.5% of £8.80

With a calculator

3) Change the following to percentages:

a) 6 out of 28
b) 18 out of 37
c) 42 out of 83
d) 24 out of 96
e) 73 out of 403
f) 234 out of 659
g) 871 out of 903
h) 4.7 out of 23
i) 6.9 out of 79
j) 14.8 out of 23.6
k) 65.8 out of 203.7
l) 12 out of 2314

Without a calculator

4) Change the following to percentages:

a) 46 out of 100
b) 18 out of 50
c) 7 out of 25
d) 23 out of 25
e) 9 out of 20
f) 16 out of 20
g) 7 out of 10
h) 9.5 out of 10
i) 10 out of 40
j) 16 out of 40
k) 30 out of 40
l) 12 out of 40
m) 28 out of 80
n) 32 out of 80
o) 60 out of 80
p) 3 out of 5
q) 4 out of 5
r) 15 out of 75
s) 24 out of 75
t) 30 out of 75

No calculator

5) A shop gives a discount of 20% on a magazine that usually sells for £2.80. Work out the discount in pence.

With a calculator

6) A television costs £595 plus VAT at 17.5%.

Work out the cost of the television including VAT.

With a calculator

7) Peter has 128 trees in his garden.

16 of the trees are pear trees.

What percentage of the trees in his garden are pear trees?

With a calculator

8) A battery operated car travels for 10m when it is first turned on.

Each time it is turned on it travels 90% of the previous distance as the battery starts to run out.

How many times does the car travel at least 8 metres?

With a calculator

9) Jane scored 27 out of 42 in a Maths test and 39 out of 61 in a Science test.

What were her percentages in both subjects to 1 decimal place?

No calculator

10) In class 7A there are 7 girls and 18 boys.

What percentage of the class are girls?

No calculator

11) A shop decides to reduce all the prices by 15%.

The original price of a pair of trainers was £70. How much are they after the reduction?

No calculator

12) VAT at 17.5% is added to the price of a car. Before the VAT is added it cost £18000.

How much does it cost with the VAT?

Increase/Decrease by a Percentage

Non-Calculator

1) Increase:
   a) 500 by 10%
   b) 320 by 10%
   c) 80 by 15%
   d) 75 by 20%

2) Decrease:
   a) 400 by 10%
   b) 380 by 10%
   c) 140 by 15%
   d) 35 by 20%

3) The price of laptop is increased by 15%.
   The old price of the laptop was £300.
   Work out the new price.

4) The price of a £6800 car is reduced by 10%.
   What is the new price?

Calculator

5) Increase:
   a) 65 by 12%
   b) 120 by 23%
   c) 600 by 17.5%
   d) 370 by 17.5%

6) Decrease:
   a) 42 by 15%
   b) 79 by 12%
   c) 52 by 8.5%
   d) 8900 by 18%

7) The price of a mobile phone is £78.40 plus VAT.
   VAT is charged at a rate of 17.5%.
   What is the total price of the mobile phone?

8) In a sale, normal prices are reduced by 7%.
   The normal price of a camera is £89.
   Work out the sale price of the camera.

9) A car dealer offers a discount of 20% off the normal price of a car, for cash.
   Peter intends to buy a car which usually costs £6800.
   He intends to pay by cash.
   Work out how much he will pay.

10) A month ago, John weighed 97.5 kg.
    He now weighs 4.5% more.
    Work out how much John now weighs.
    Give your answer to 1 decimal place.

© Mathswatch	Clip 95

Product of Prime Factors

1) List the first seven prime numbers.

2) Express the following number as the product of their prime factors:

a) 30 b) 60 c) 360 d) 220

3) Express the following number as the product of **powers** of their prime factors:

a) 24 b) 64 c) 192 d) 175

4) The number 96 can be written as $2^m \times n$, where m and n are prime numbers.
Find the value of m and the value of n.

5) The number 75 can be written as $5^x \times y$, where x and y are prime numbers.
Find the value of x and the value of y.

© Mathswatch	Clip 96

HCF and LCM

1) Find the Highest Common Factor (HCF) of each of these pairs of numbers.

a) 16 and 24 b) 21 and 28 c) 60 and 150 d) 96 and 108

2) Find the Least (or Lowest) Common Multiple (LCM) of each of these pairs of numbers.

a) 16 and 24 b) 21 and 28 c) 60 and 150 d) 96 and 108

3) a) Write 42 and 63 as products of their prime factors.

b) Work out the HCF of 42 and 63.

c) Work out the LCM of 42 and 63.

4) a) Write 240 and 1500 as products of their prime factors.

b) Work out the HCF of 240 and 1500.

c) Work out the LCM of 240 and 1500.

Standard Form

1) Change the following to normal (or ordinary) numbers.

a) 4.3×10^4

b) 6.79×10^6

c) 7.03×10^3

d) 9.2034×10^2

e) 1.01×10^4

f) 4×10^5

2) Change the following to normal (or ordinary) numbers.

a) 4.3×10^{-4}

b) 6.79×10^{-6}

c) 7.03×10^{-3}

d) 9.2034×10^{-2}

e) 1.01×10^{-4}

f) 4×10^{-5}

3) Change the following to standard form.

a) 360

b) 8 900

c) 520 000

d) 62 835

e) 1 003

f) 6 450 000

4) Change the following to standard form.

a) 0.71

b) 0.0008

c) 0.00076

d) 0.0928

e) 0.00009

f) 0.00000173

5) Work out the following, giving your answer in standard form.

a) $3\,000 \times 5\,000$

b) 240×0.0002

c) $9 \times 1.1 \times 10^7$

d) $5 \times 4 \times 10^3$

e) $\dfrac{8 \times 10^4}{4 \times 10^2}$

f) $9 \times 10^2 \times 2 \times 10^{-5}$

g) $7 \times 10^2 \times 3 \times 10^{-4}$

h) $2 \times 3.6 \times 10^{-5}$

i) $6 \times 4.1 \times 10^3$

© Mathswatch	Clip 99

Four Rules of Negatives

Work out the following without a calculator

a) $6 - 9 =$

b) $4 \times -3 =$

c) $-10 \div -5 =$

d) $-7 - -6 =$

e) $25 \div -5 =$

f) $-2 + -6 =$

g) $7 - -3 =$

h) $6 \times -9 =$

i) $5 + -11 =$

j) $-8 \times 4 =$

k) $12 + -3 =$

l) $5 + 9 - 3 =$

m) $-3 \times -2 \times 4 =$

n) $-6 - -5 - 8 =$

o) $-5 \times -6 \times -2 =$

p) $8 \div -4 \times -5 =$

q) $2 + -8 + -7 =$

r) $13 + -13 =$

s) $16 \div -2 \times 4 =$

t) $11 - 3 + -9 - -5 =$

u) $-7 \times -2 \times -3 =$

v) $-1 + -3 + 2 =$

Mathswatch	Clip 100

Division by Two-Digit Decimals

1) Work out the following without a calculator

a) $350 \div 0.2$

b) $2 \div 0.25$

c) $0.45 \div 0.9$

d) $2.42 \div 0.4$

e) $30.66 \div 2.1$

f) $5.886 \div 0.9$

g) $38.08 \div 1.7$

h) $98.8 \div 0.08$

2) Sam is filling a jug that can hold 1.575 litres, using a small glass.
The small glass holds 0.035 litres.
How many of the small glasses will he need?

Estimating Answers

1. Work out an estimate for the value of

a) $\dfrac{547}{4.8 \times 9.7}$

b) $\dfrac{69 \times 398}{207}$

c) $\dfrac{7.5 \times 2.79}{2.71 + 3.19}$

d) $\dfrac{409 \times 5.814}{0.19}$

2. a) Work out an estimate for

$$\frac{19.6 \times 31.7}{7.9 \times 5.2}$$

b) Use your answer to part (a) to find an estimate for

$$\frac{196 \times 317}{79 \times 52}$$

3. a) Work out an estimate for

$$\frac{6.13 \times 9.68}{3.79 \times 2.56}$$

b) Use your answer to part (a) to find an estimate for

$$\frac{613 \times 968}{379 \times 256}$$

Inequalities

1) Represent this inequality on the number line

$-3 < x \leqslant 2$

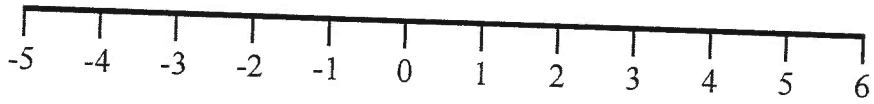

2) Represent this inequality on the number line

$-1 \leqslant x < 5$

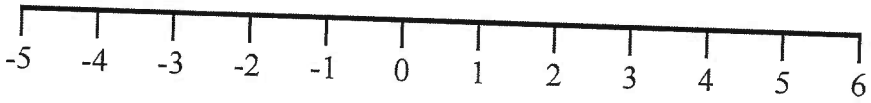

3) Write down the inequality shown

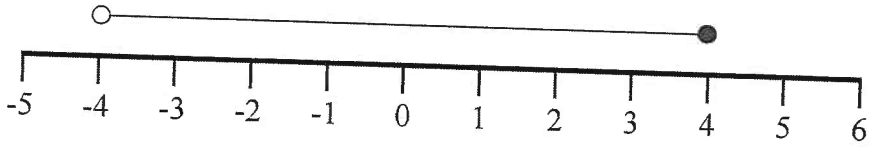

4) Write down the inequality shown

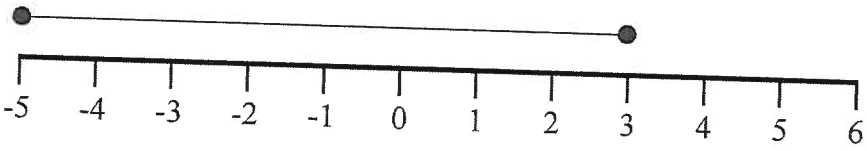

5) If y is an integer, write down all the possible values of

$-2 < y \leqslant 5$

6) If x is an integer, write down all the possible values of

$-9 < x < -5$

Compound Measures

1) Jane runs 200 metres in 21.4 seconds.

Work out Jane's average speed in metres per second.
Give your answer correct to 1 decimal place.

2) A car travels at a steady speed and takes five hours to travel 310 miles.

Work out the average speed of the car in miles per hour.

3) A plane flies 1440 miles at a speed of 240 mph.

How long does it take?

4) A marathon runner runs at 7.6 mph for three and a half hours.

How many miles has he run?

5) A car takes 15 minutes to travel 24 miles.

Find its speed in **mph**.

6) A cyclist takes 10 minutes to travel 2.4 miles.

Calculate the average speed in mph.

---

7) An ice hockey puck has a volume of 113 cm^3.

It is made out of rubber with a density of 1.5 grams per cm^3.

Work out the mass of the ice hockey puck.

8) An apple has a mass of 160 g and a volume of 100 cm^3.

Find its density in g/cm^3.

9) A steel ball has a volume of 1500 cm^3.

The density of the ball is 95 g/cm^3.

Find the mass of the ball in kg.

10) The mass of a bar of chocolate is 1800 g.

The density of the chocolate is 9 g/cm^3.

What is the volume of the bar of chocolate?

Standard Form Calculation

1) Work out the following, giving your answer in standard form.

a) $(6 \times 10^2) \times (8 \times 10^4)$

b) $(2 \times 10^5) + (3 \times 10^4)$

c) $\dfrac{3 \times 10^3}{6 \times 10^{-5}}$

d) $(9.2 \times 10^5) \div (2 \times 10^2)$

2) A spaceship travelled for 5×10^3 hours at a speed of 9×10^4 km/h.

a) Work out the distance travelled by the spaceship.
Give your answer in standard form.

Another spaceship travelled a distance of 2×10^7 km, last month.
This month it has travelled 5×10^6 km.

b) Work out the total distance travelled by the spaceship over these past two months.
Give your answer as a normal (or ordinary) number.

3) Work out the following, giving your answer in standard form, correct to 2 significant figures.

a) $2.6 \times 10^3 \times 4.3 \times 10^4$

b) $(7.5 \times 10^5) \times (1.9 \times 10^{-2})$

c) $\dfrac{9.435 \times 10^5}{3.28 \times 10^3}$

d) $\dfrac{5.98 \times 10^8}{6.14 \times 10^{-2}}$

4) Work out the following, giving your answer in standard form correct to 3 significant figures.

a) $\dfrac{5.76 \times 10^7 + 3.89 \times 10^9}{7.18 \times 10^{-2}}$

b) $\dfrac{7.2 \times 10^{-2} - 5.4 \times 10^{-1}}{9.25 \times 10^{-7}}$

c) $\dfrac{3 \times 10^8 \times 2 \times 10^7}{3 \times 10^8 + 2 \times 10^7}$

d) $\dfrac{3 \times 3.2 \times 10^{12} \times 1.5 \times 10^{12}}{3.2 \times 10^{12} - 1.5 \times 10^{12}}$

5) A microsecond is 0.000 001 seconds.

a) Write the number 0.000 001 in standard form.

A computer does a calculation in 3 microseconds.

b) How many of these calculations can the computer do in 1 second?
Give your answer in standard form, correct to 3 significant figures.

6) 340 000 tomato seeds weigh 1 gram.
Each tomato seed weighs the same.

a) Write the number 340 000 in standard form.

b) Calculate the weight, in grams, of one tomato seed.
Give your answer in standard form, correct to 2 significant figures.

Compound Interest/Depreciation

1) Henry places £6000 in an account which pays 4.6% compound interest each year.
Calculate the amount in his account after 2 years.

2) Sarah puts £8600 in a bank. The bank pays compound interest of 3.8% per year.
Calculate the amount Sarah has in her account after 4 years.

3) Mary deposits £10000 in an account which pays 5.6% compound interest per year.
How much will Mary have in her account after 5 years?

4) Susan places £7900 in an account which pays 2.4% compound interest per year.
How much interest does she earn in 3 years?

5) Harry puts money into an account which pays 6% compound interest per year.
If he puts £23000 in the account for 5 years how much interest will he earn altogether?

---

6) Laura buys a new car for £14600.
The annual rate of depreciation is 23%.
How much is the car worth after 3 years?

7) The rate of depreciation of a particular brand of computer is 65% per year. If the cost of the computer when new is £650 how much is it worth after 2 years?

8) Sharon pays £3500 for a secondhand car.
The annual rate of depreciation of the car is 24%
How much will it be worth four years after she has bought it?

---

9) Dave places £17000 in an account which pays 4% compound interest per year.
How many years will it take before he has £19122.68 in the bank?

10) A new motorbike costs £8900.
The annual rate of depreciation is 18% per year.
After how many years will it be worth £2705.66?

Reverse Percentages

1) In a sale, normal prices are reduced by 20%.
The sale price of a shirt is £26

Calculate the normal price of the shirt.

2) A car dealer offers a discount of 15% off the normal price of a car for cash.
Emma pays £6120 cash for a car.

Calculate the normal price of the car.

3) In a sale, normal prices are reduced by 13%.
The sale price of a DVD recorder is £108.75

Calculate the normal price of the DVD recorder.

4) A salesman gets a basic wage of £160 per week plus a commision of 30% of the sales he makes that week.
In one week his total wage was £640

Work out the value of the sales he made that week.

5) Jason opened an account at MathsWatch Bank.
MathsWatch Bank's interest rate was 4%.
After one year, the bank paid him interest.
The total amount in his account was then £1976

Work out the amount with which Jason opened his account

6) Jonathan's weekly pay this year is £960.
This is 20% more than his weekly pay last year.

Tess says "This means Jonathan's weekly pay last year was £768".
Tess is wrong.

a) Explain why

b) Work out Jonathan's weekly pay last year.

7) The price of all rail season tickets to London increased by 4%.

a) The price of a rail season ticket from Oxford to London increased by £122.40
Work out the price before this increase.

b) After the increase, the price of a rail season ticket from Newport to London was £2932.80
Work out the price before this increase.